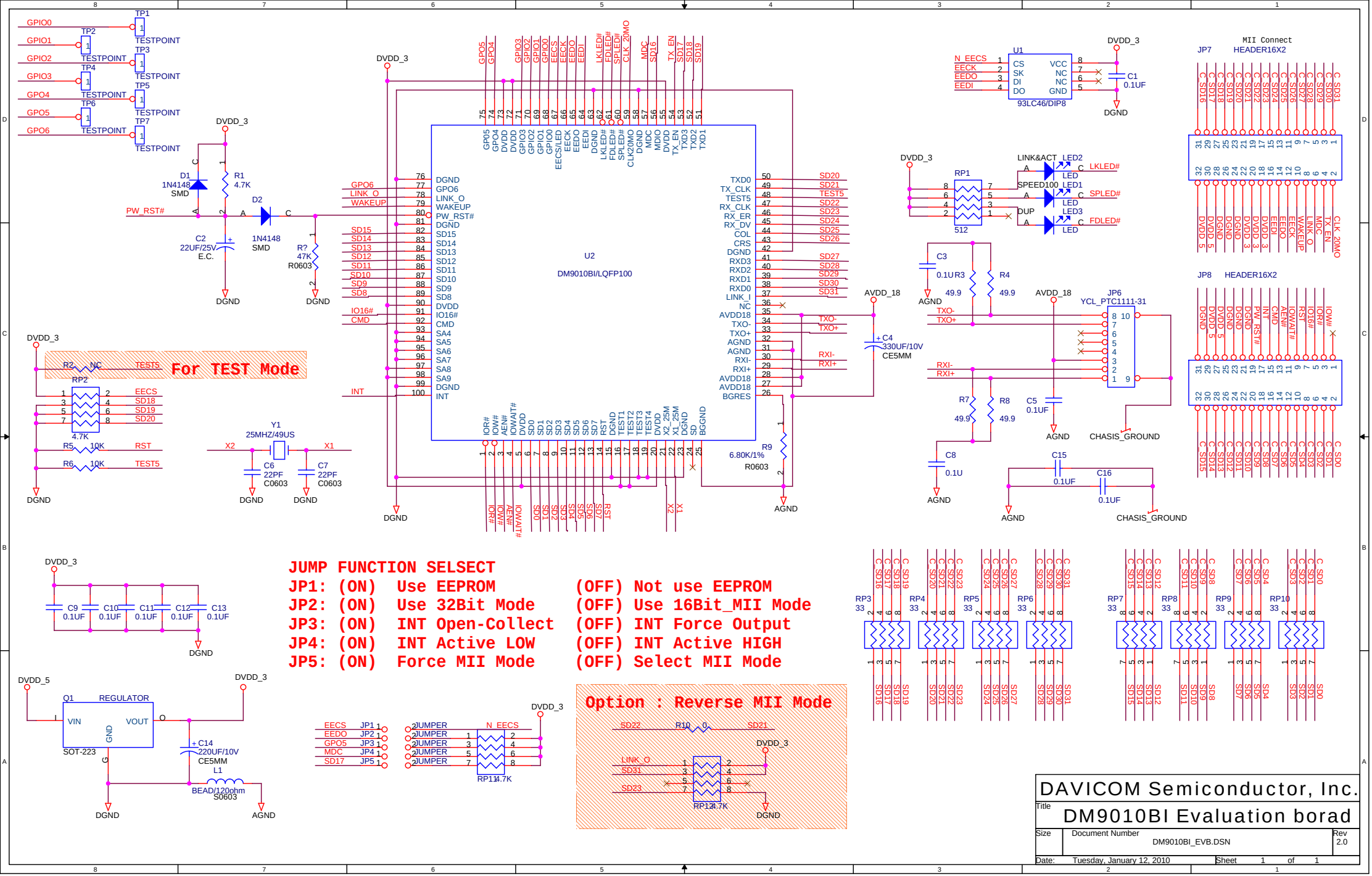

JUMP FUNCTION SELSECT

JP1:	(ON) Use EEPROM	(OFF) Not use EEPROM
JP2:	(ON) Use 32Bit Mode	(OFF) Use 16Bit_MII Mode
JP3:	(ON) INT Open-Collect	(OFF) INT Force Output
JP4:	(ON) INT Active LOW	(OFF) INT Active HIGH
JP5:	(ON) Force MII Mode	(OFF) Select MII Mode

DAVICOM Semiconductor, Inc.

Title: DM9010BI Evaluation borad

Size | Document Number: DM9010BI_EVB.DSN | Rev: 2.0

Date: Tuesday, January 12, 2010 | Sheet 1 of 1