RST#	LOW	ACTIVE	(CHIP RESET)
CS#	LOW	ACTIVE	(CHIP SELECT)
IOR#	LOW	ACTIVE	(IO DATA READ)
IOW#	LOW	ACTIVE	(IO DATA WRITE)
INT	HIGH	ACTIVE	(INTERRUPT ACTIVE)

JP1	ON	: USE 8 Bit MODE
	OFF	: USE 16 Bit MODE
JP2	ON	: USE EEPROM
	OFF	: NOT USE EEPROM
JP7	ON	: INT LOW ACTIVE
	OFF	: INT HIGH ACTIVE

FOR NORMAL SYSTEM
JP3 2-3 SHORT
FOR X86 PC-ISA SYSTEM 16 Bit MODE
JP3 1-2 SHORT

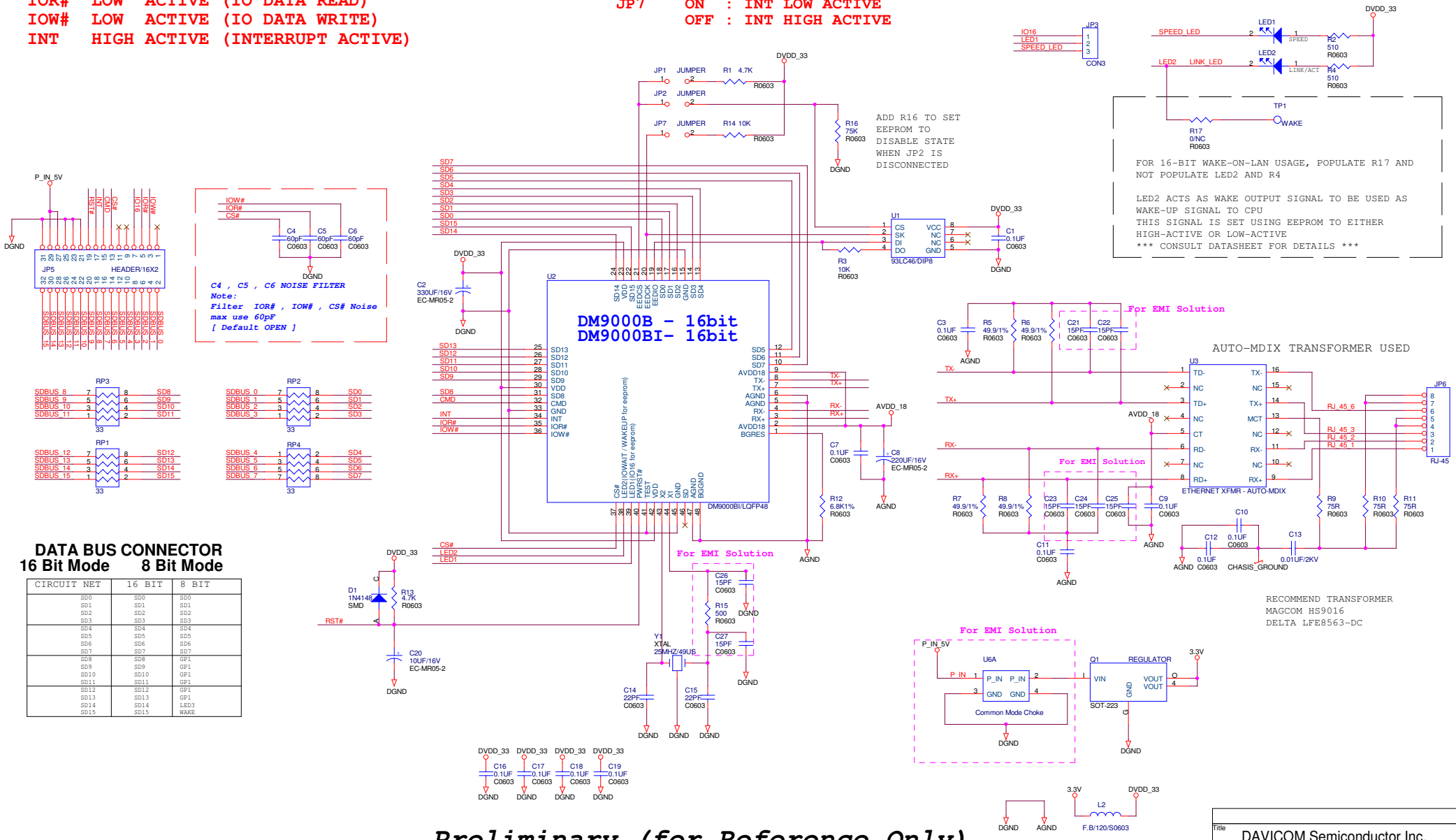

DATA BUS CONNECTOR
16 Bit Mode 8 Bit Mode

CIRCUIT NET	16 BIT	8 BIT
SD0	SD0	SD0
SD1	SD1	SD1
SD2	SD2	SD2
SD3	SD3	SD3
SD4	SD4	SD4
SD5	SD5	SD5
SD6	SD6	SD6
SD7	SD7	SD7
SD8	SD8	GP1
SD9	SD9	GP1
SD10	SD10	GP1
SD11	SD11	GP1
SD12	SD12	GP1
SD13	SD13	GP1
SD14	SD14	LED3
SD15	SD15	WAKE

Preliminary (for Reference Only)

Title	DAVICOM Semiconductor Inc.
Size Custom	Document Number DM9000B/BI-16bit TX AUTO-MIDX
Rev	1.2
Date:	Thursday, April 16, 2009
Sheet	1 of 1