DM8603 Fiber Mode

Application Note

CONFIDENTIAL

Hardware Change

1. Add Port 0 and Port 1 Fiber circuit:

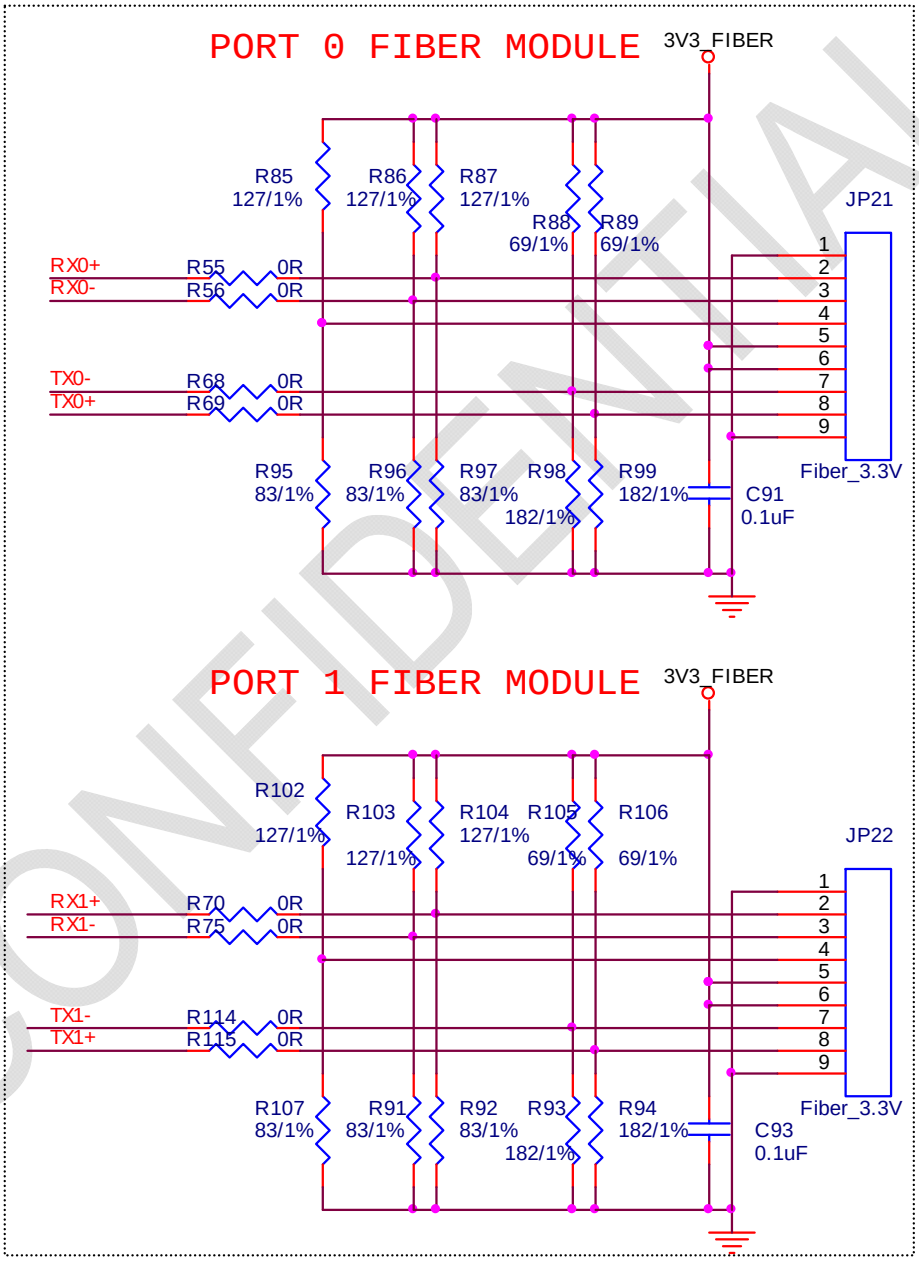

CONFIDENTIAL

2. Pin 29 and Pin 14 Jumper setting to Fiber mode

PIN name	Pin No.	Description
EECS	29	0: P0 in TP mode (Default) 1: P0 in Fiber mode
TXER	14	0: P1 in TP mode (Default) 1: P1 in Fiber mode

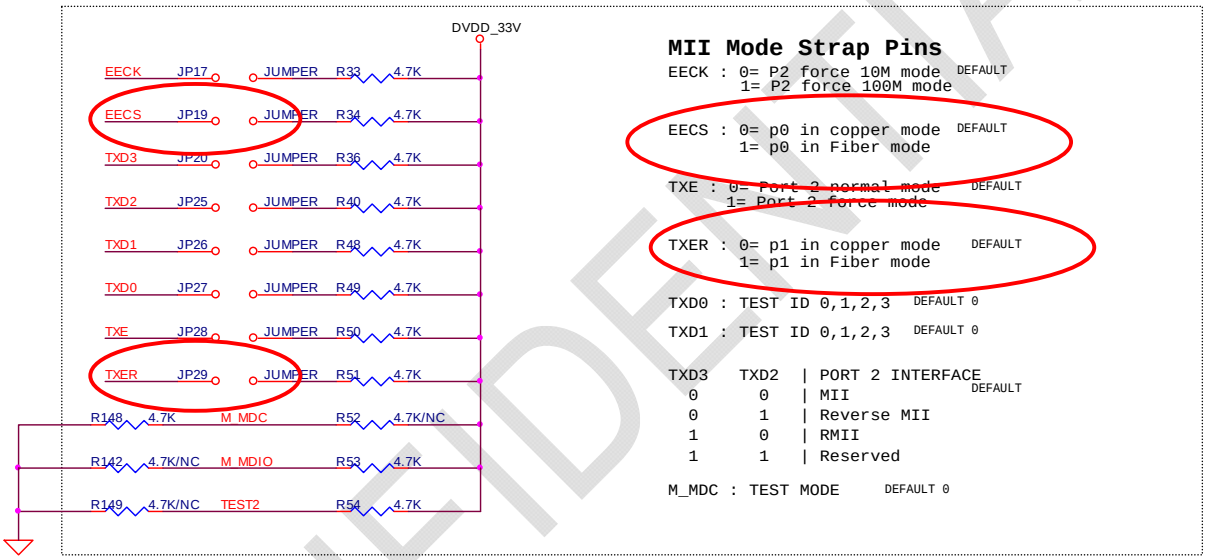

CONFIDENTIAL

When 'link fault pass through' function is enabled:

1. TP port link failed
2. > 4 sec. Fiber port is turned off
3. Fiber port Receives no signal
4. > 4 sec. TP port is turned off
5. Remote TP Link is off

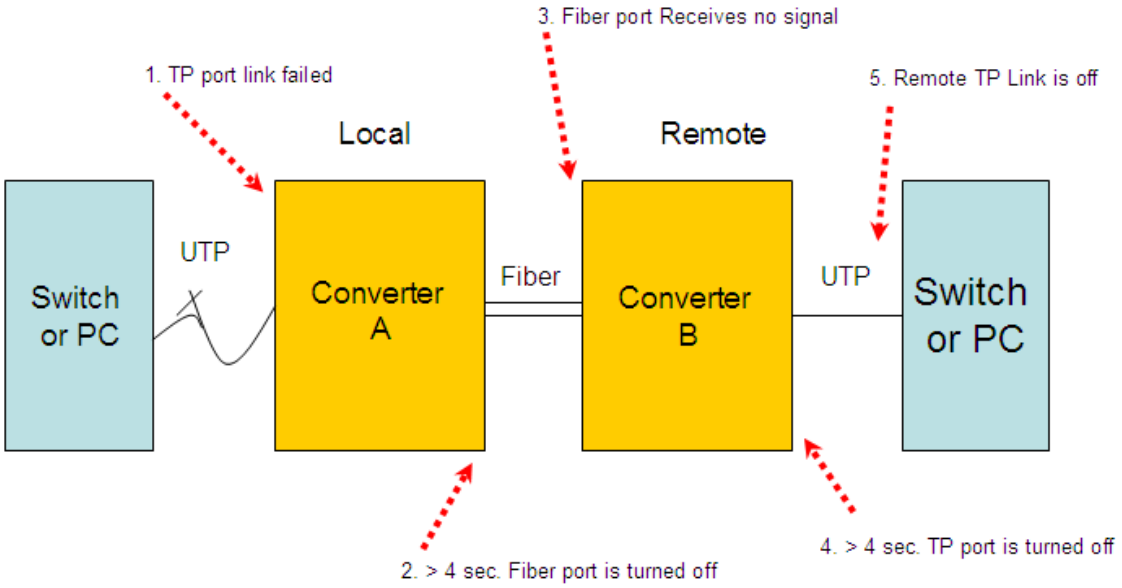

Enable LFP Function

Hardware Additions

Basing on “Hardware Change” Description above, LFP can be set by following the table (1)-(3) as below.

LFP Setting Selection

(1) Jumper Setting

5	P2_TXD3	P2 Mode Configuration		
6	P2_TXD2	P2_TXD3	P2_TXD2	
		0	0	Port 2 is MII mode
		0	1	Port 2 is Reverse MII mode
		1	0	Port 2 is RMII mode
		1	1	Port 2 and Port 1's LFP function are enabled (Port 2 is MII mode) *RMII mode: Please use software or EEPROM setting

Software Additions

(2)PHY Control Test Register (33Eh)

PHY_ADR	REG_ADR	ABS_ADR
19h	1Eh	33Eh

Bit	ROM	Type	Default	Description
8	07h. [8]	PSET,RW	0b	PHY_LFP_EN PHY LFP Control 0: PHY LFP Disable 1: PHY LFP Enable

(3) EEPROM Format

PHY control	07h	Bit [08]	= PHY LFP control 1: ON, 0: OFF

CONFIDENTIAL

DM8603 Application circuit:

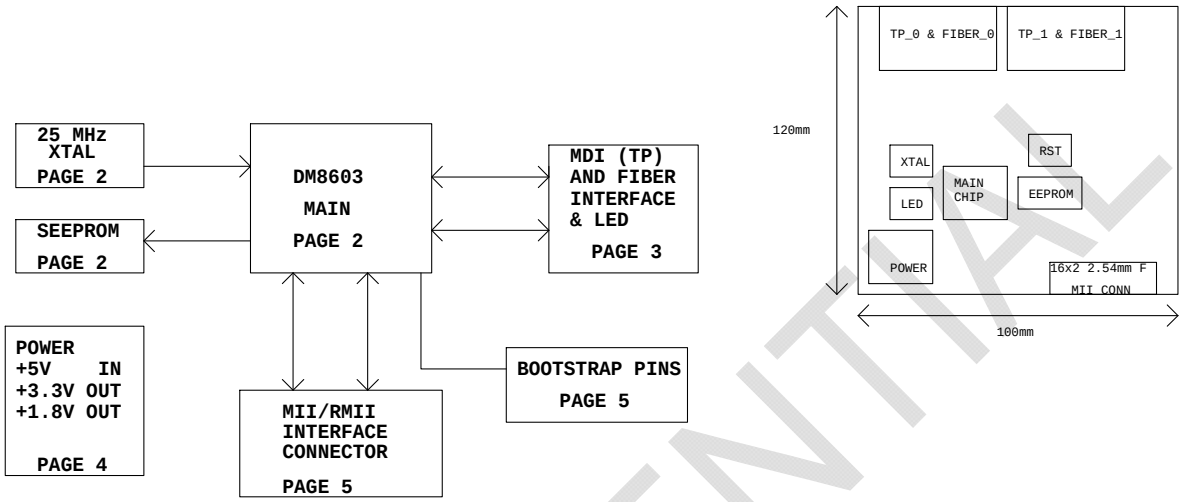

2 PORTS + MII DEMO BOARD V1.0
Davicom Semiconductor Inc.
P/N: D2L-8603-E-01-1

Davicom Semiconductor Inc.		
Title	DM8603 Demo Board	
Size A4	Document Number TOP	Rev 1.0
Date: Wednesday, October 13, 2010	Sheet 1 of 6	

CONFIDENTIAL

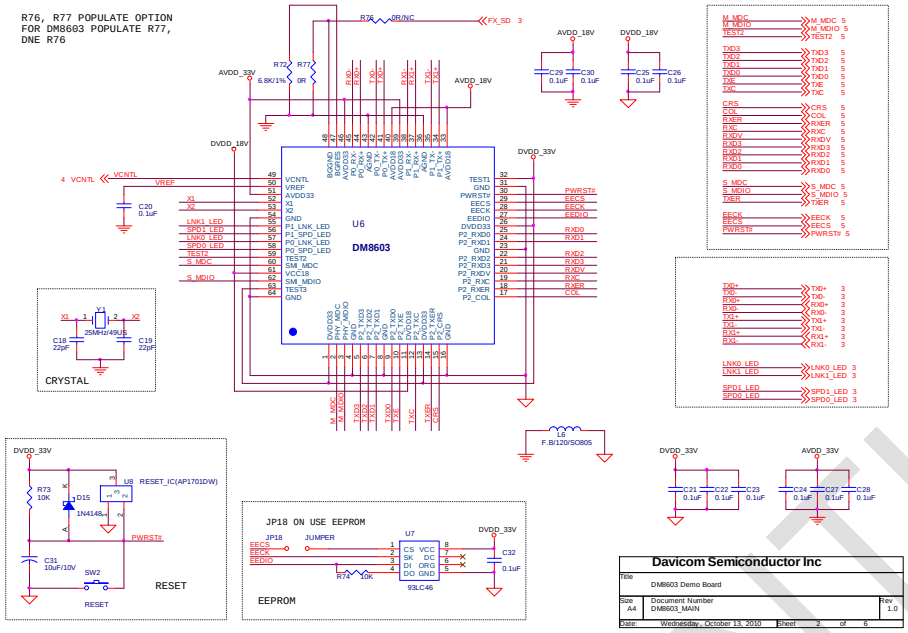

Davicom Semiconductor Inc.

CONFIDENTIAL

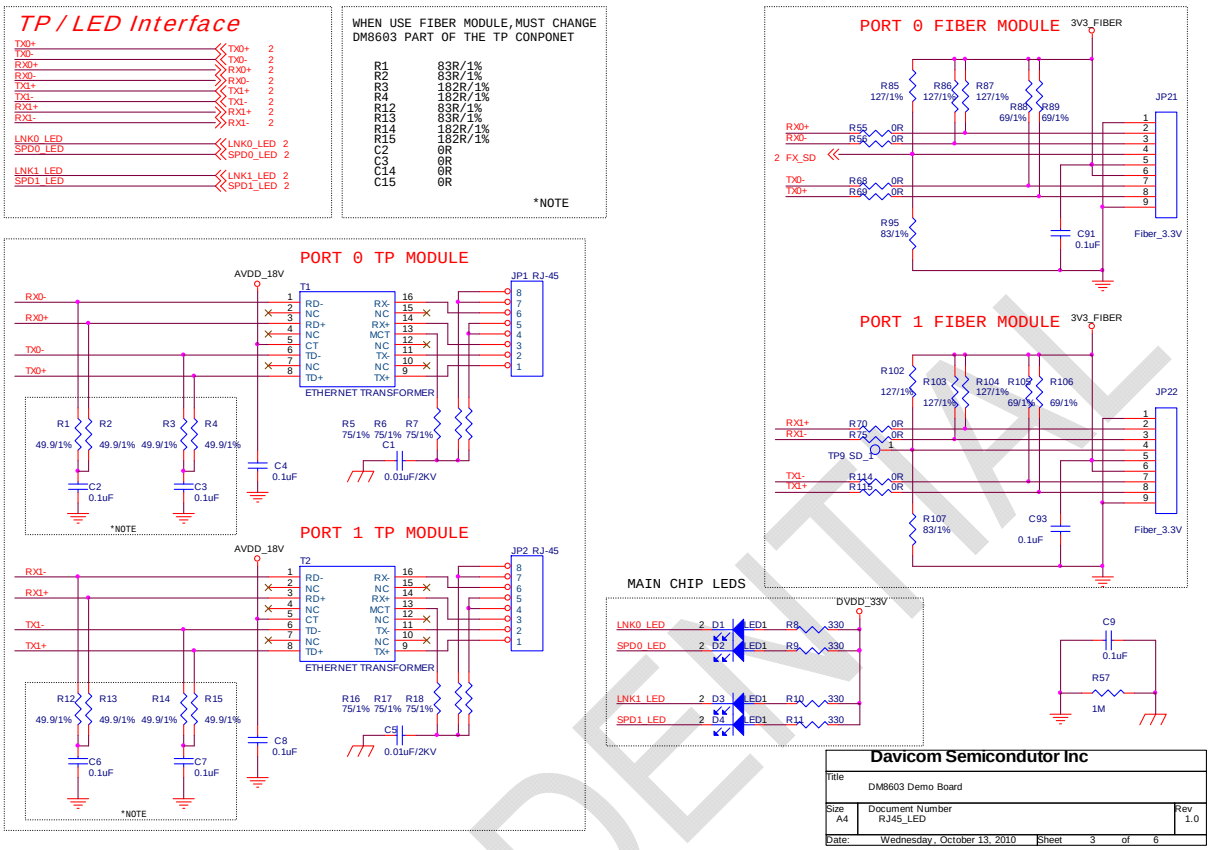

CONFIDENTIAL

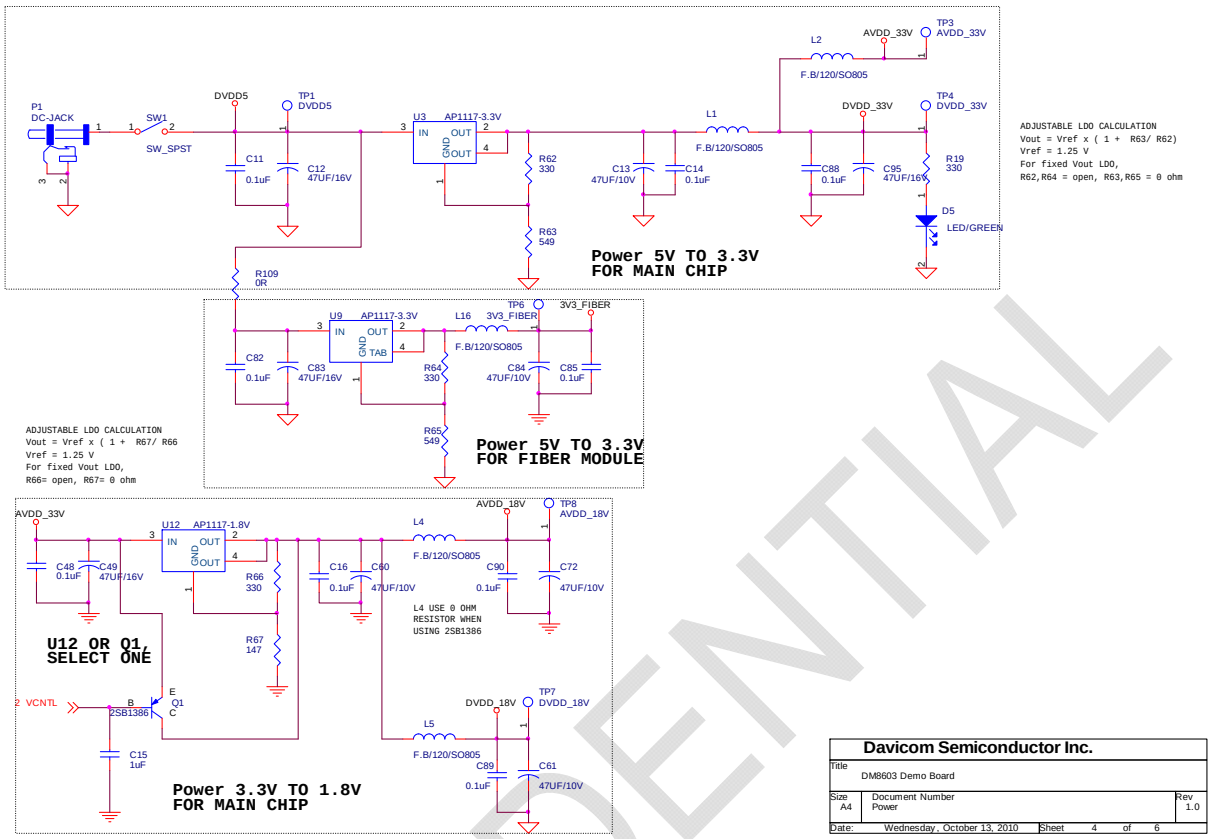

CONFIDENTIAL

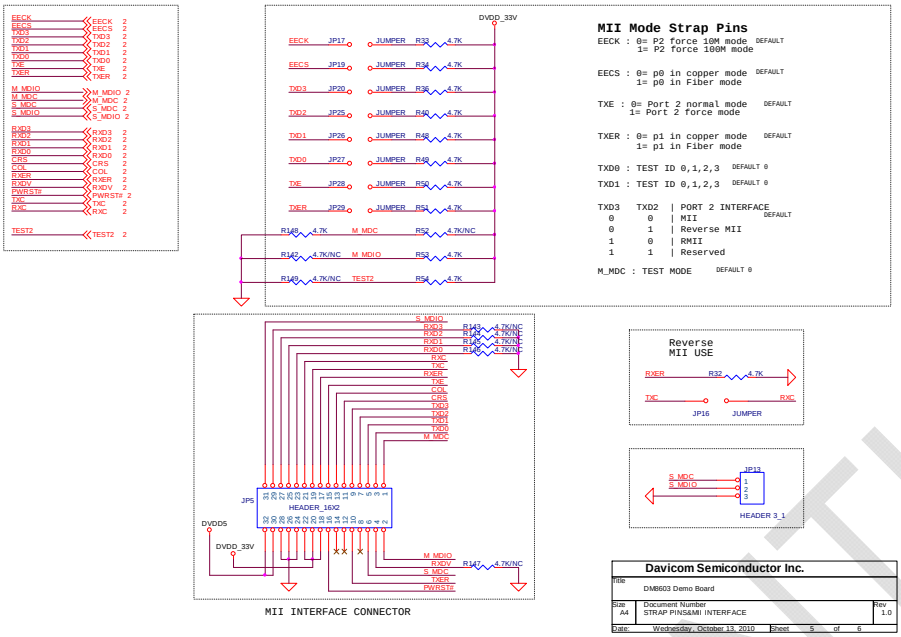

Davicom Semiconductor Inc.

CONFIDENTIAL

Application Note Revision History

Date of Revision:	Revision Number:	Reason:
November 4, 2010	01	Originally Published Application Note